MENABO

free time on the move

NEKKAR

IT	Istruzioni di montaggio	ET	Paigaldusjuhend	PT	Instruções de Montagem
EN	Fitting instructions	FI	Asennusohje	RO	Instrucțiuni de montare
DE	Montageanleitung	HR	Uputa za sastavljanje	RU	Инструкции по установке
FR	Instructions de montage	HU	A felszerelés módja	SK	Návod na montáž
ES	Instrucciones de montaje	LT	Pritvirtinimo instrukcijos	SL	Navodila za pritrjevanje
BG	инструкции за сглобяване	LV	Stiprināšanas instrukcija	SV	Monteringsanvisning
CS	Návod na montáž	NL	Instrukcja montażu	TK	Uydurma talimat
DA	Monteringsvejledning	NO	Monteringsveiledning	ZH	装修指導
EL	Οδηγίες συναρμολόγησης	PL	Instrukcja montażu	AR	تعليمات التحميل

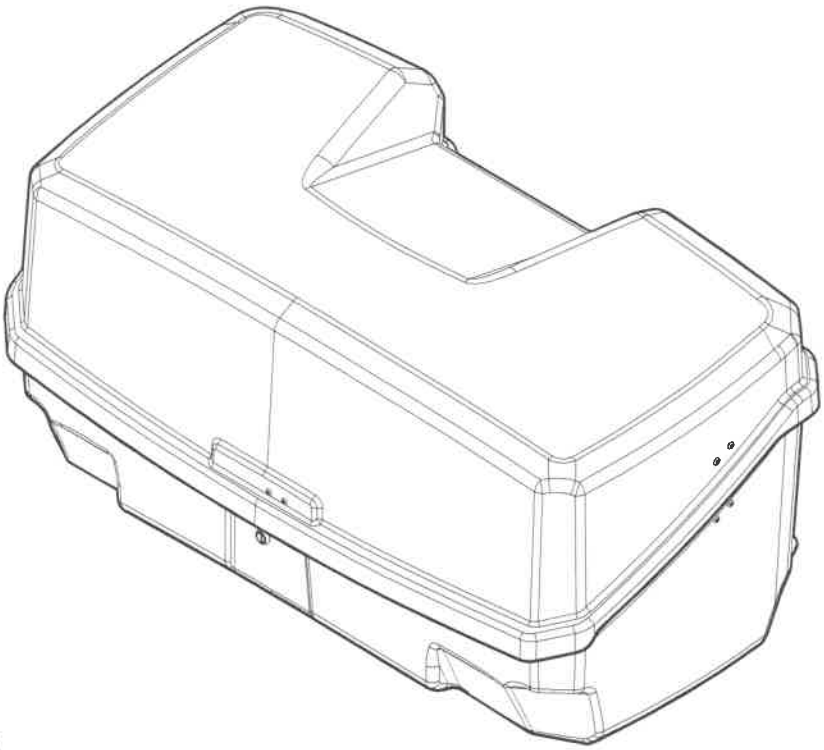

Watch video

Made in Italy

N	[IT]Componenti (Inclusi) [EN]Components (Included) [FR]Composants (Comprises) [DE]Die Komponenten (im Lieferumfang enthalten) [ES]Componentes (Incluido)	Q
1		1
2		4
3		4
4		8
5	6x18	8
6		4
7	2,5 m /8ft	2
8	xxxx	2

N	[IT]Ricambi (A Richiesta) [EN]Spare Parts (Made to order) [FR]Pièces de rechange (Sur commande) [DE]E Teile (auf Anfrage) [ES]Piezas de recambio (Previa solicitud)	Codice-Code-Código	Q
A	sx	700000100000	1
B	dx	700000200000	1
2		700001400000	1
3		700033500000	1
4		700001300000	1
7	2,5 m /8ft	700001100000	1

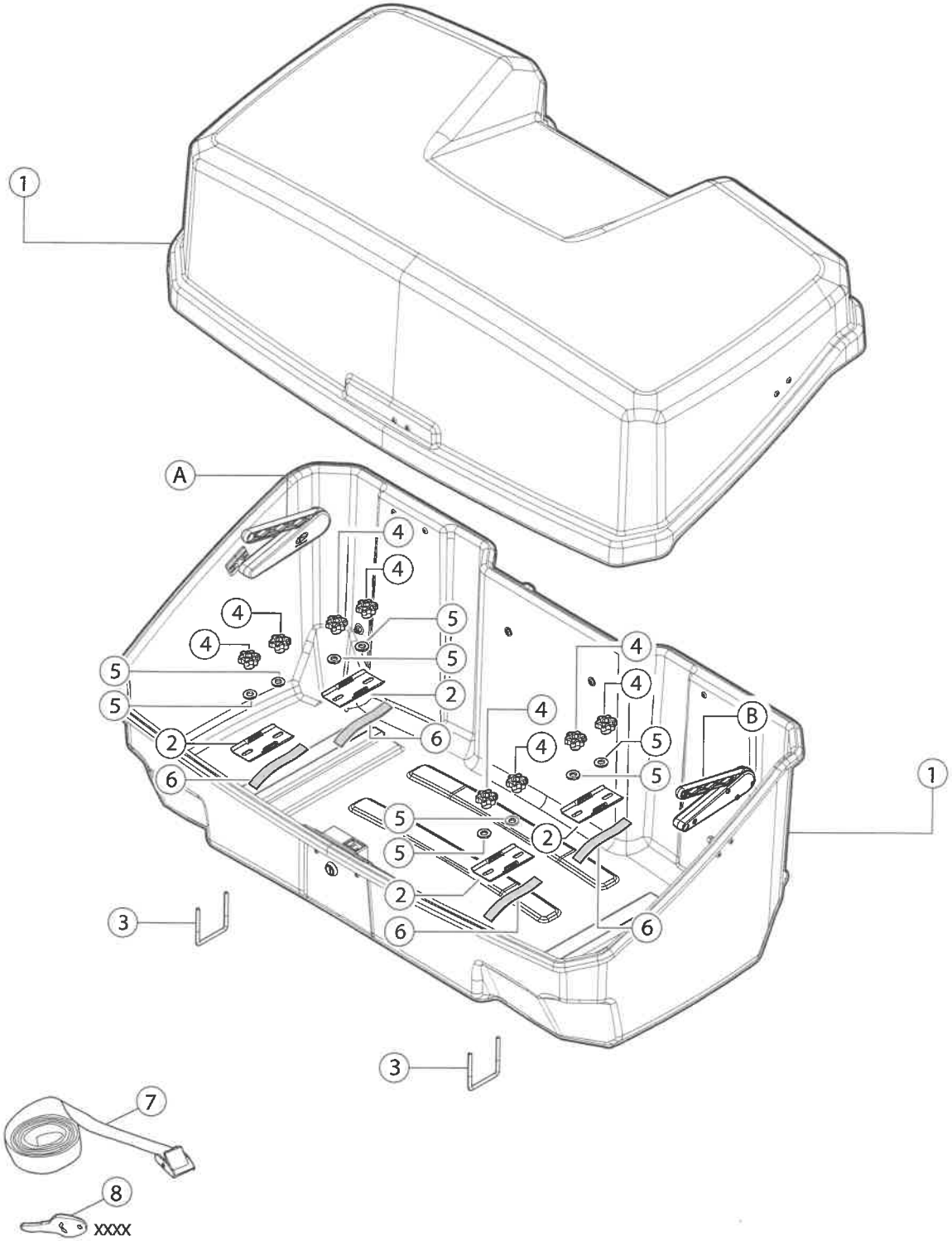
1
A
4
4
4
4
5
5
5
5
2
2
6
6
4
4
4
5
5
B
1
5
5
2
2
6
6
3
3
7
8
XXXX

①

N		Q
1		1
3		4

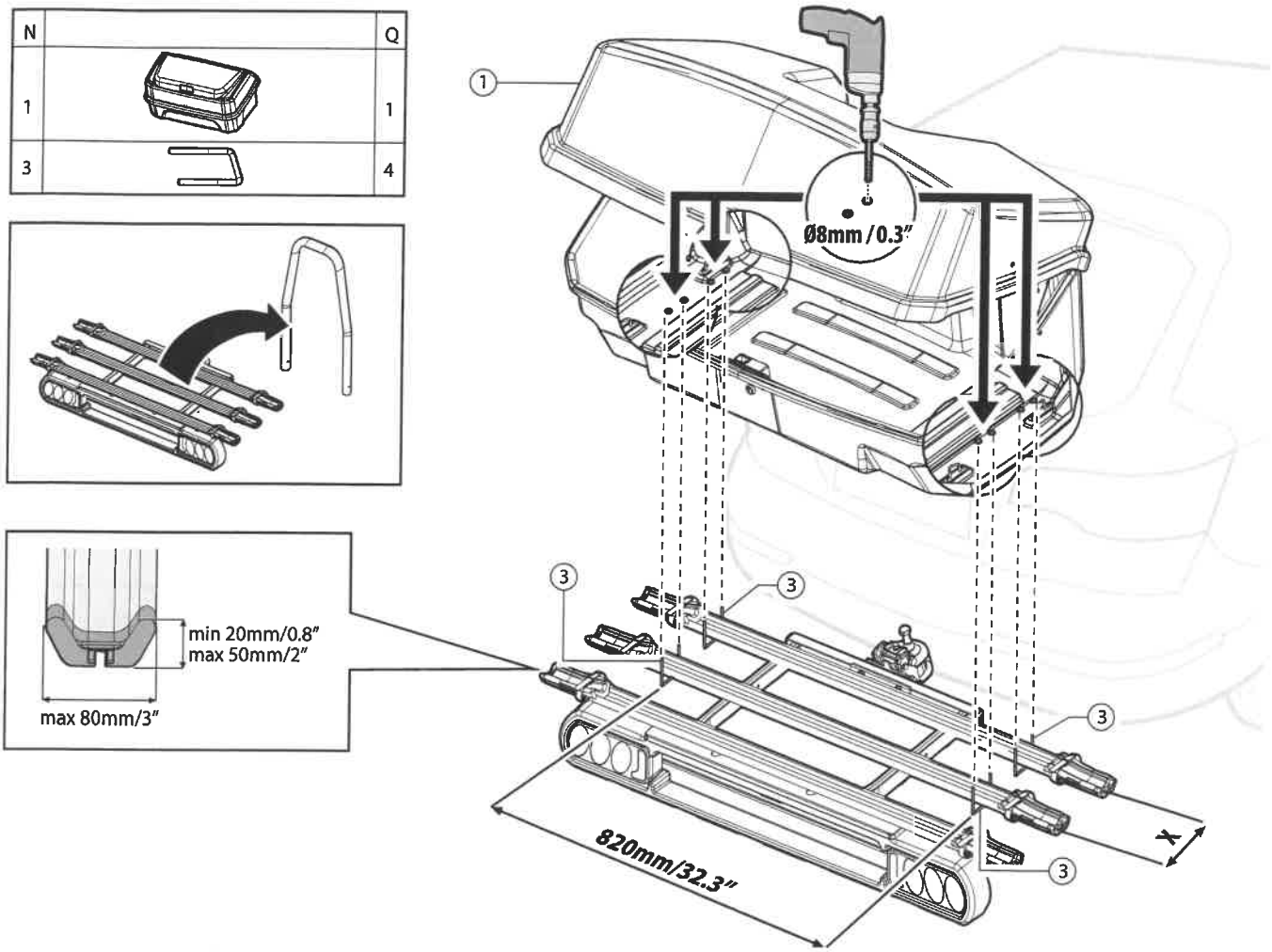
①
Ø8mm / 0.3"
③
③
③
③
min 20mm/0.8"
max 50mm/2"
max 80mm/3"
820mm/32.3"
X

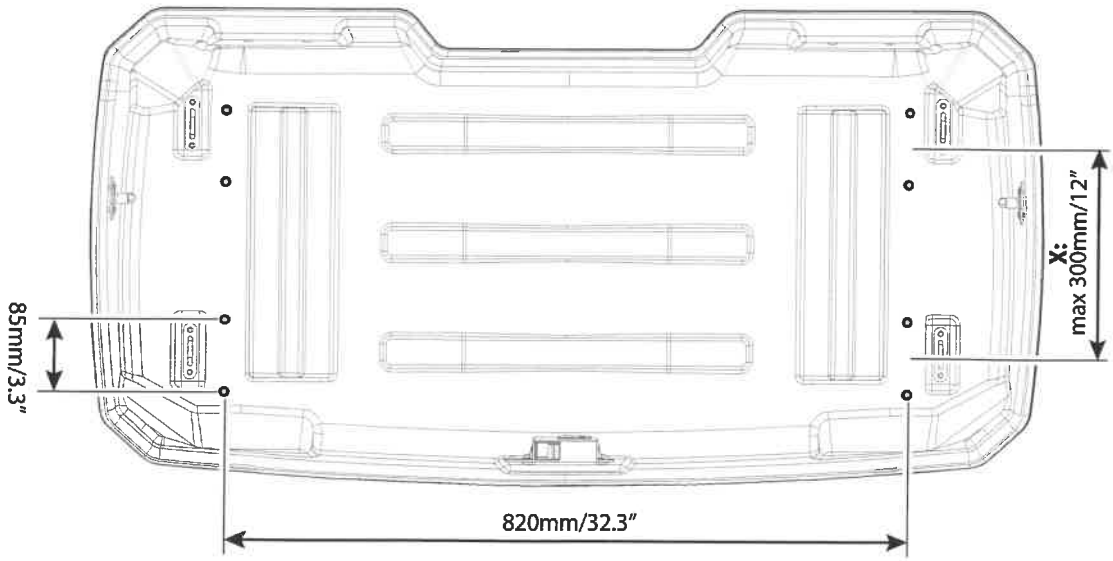
85mm/3.3"
X:
max 300mm/12"
820mm/32.3"

2

N		Q
6		4

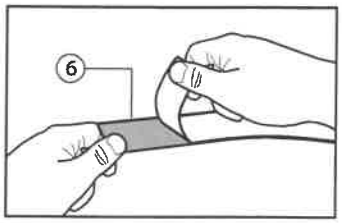

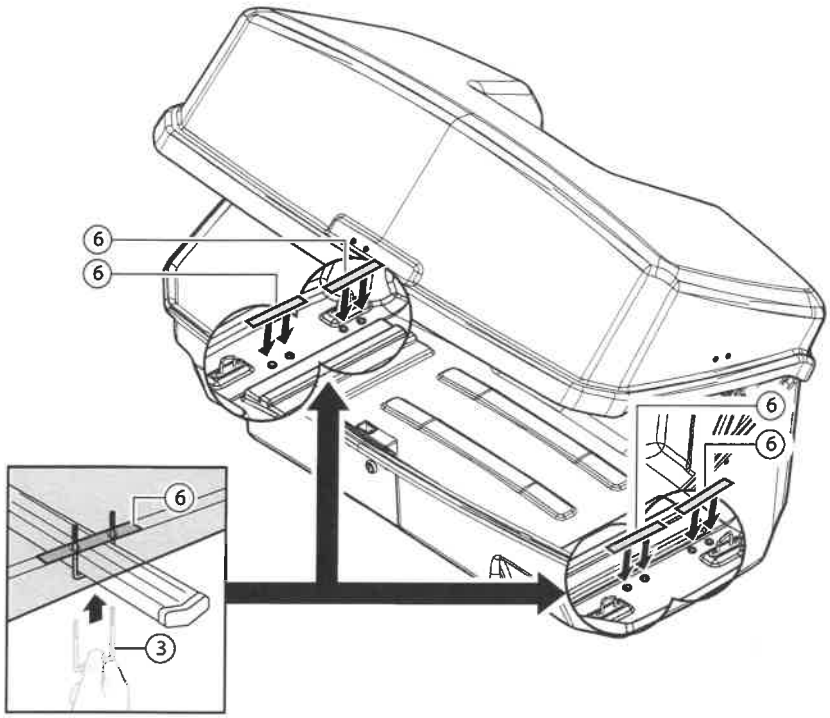

3

N		Q
2		4
4		8
5	6x18	8

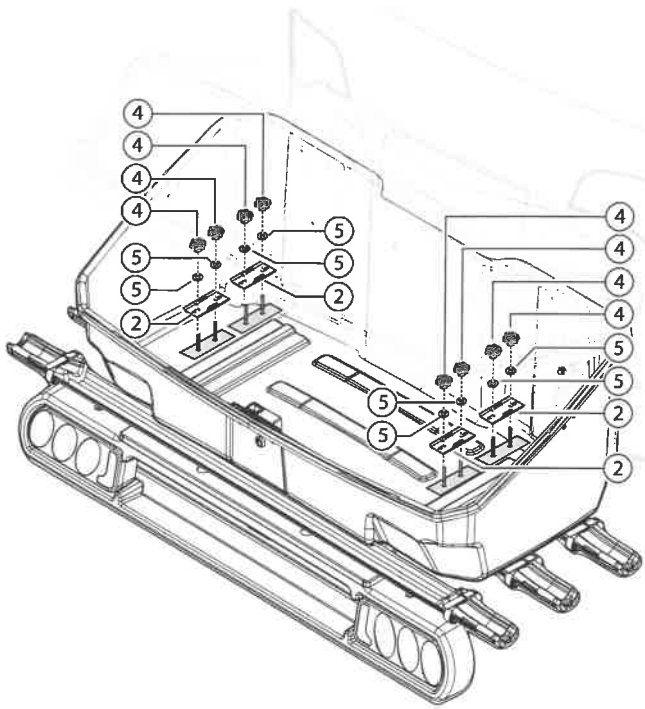

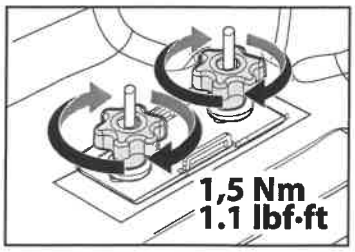

4

N		Q
7	2,5 m /8ft	2

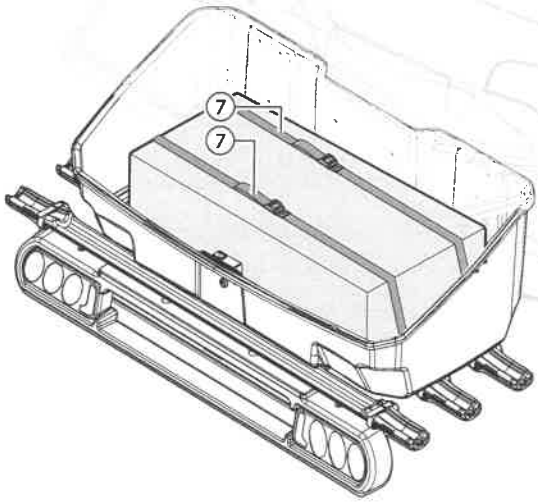

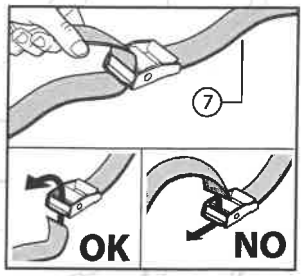

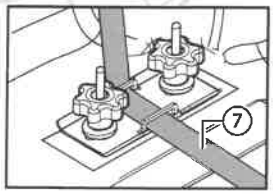

5

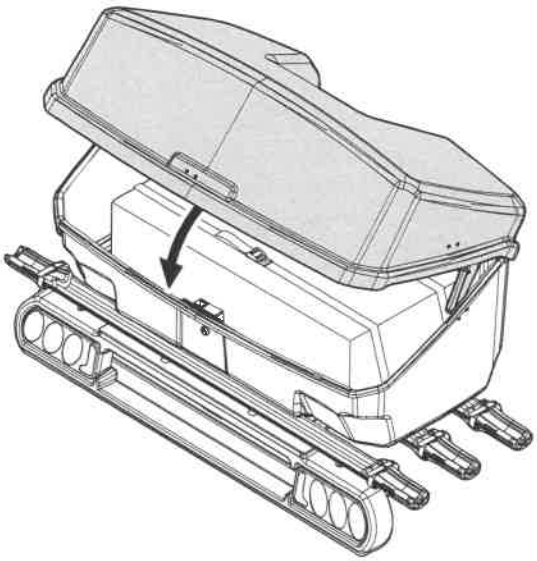

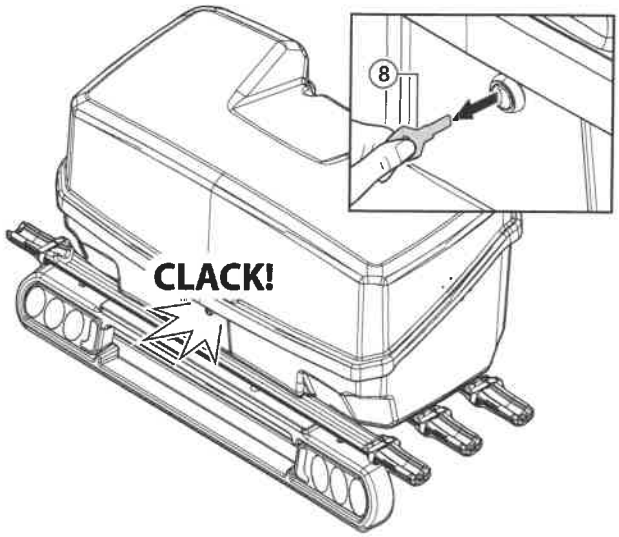

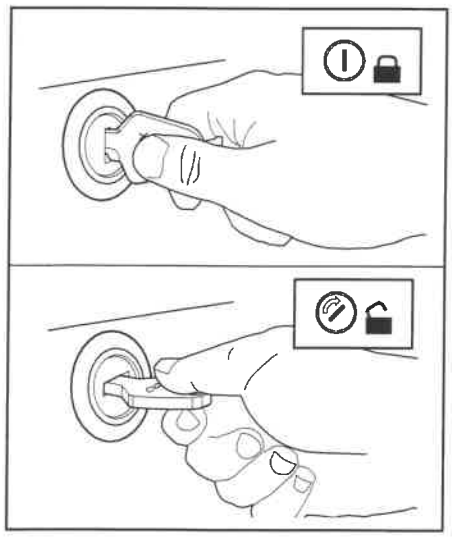

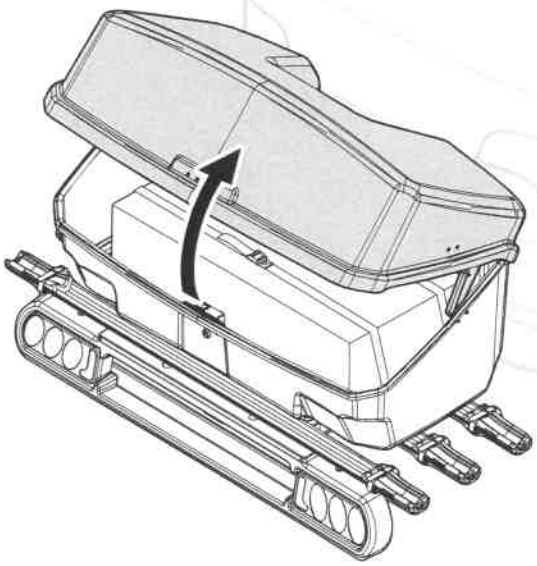

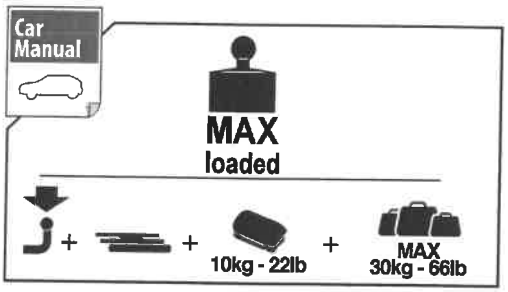
Car Manual
MAX
loaded
10kg - 22lb
MAX
30kg - 66lb

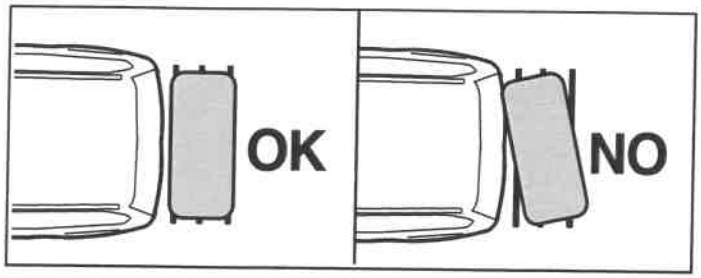
OK
NO

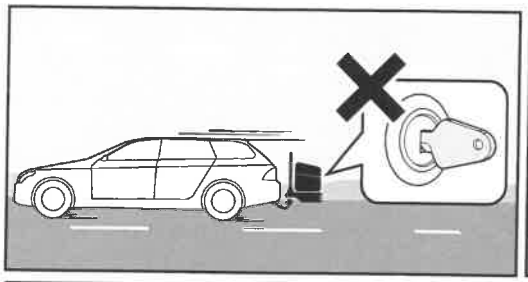

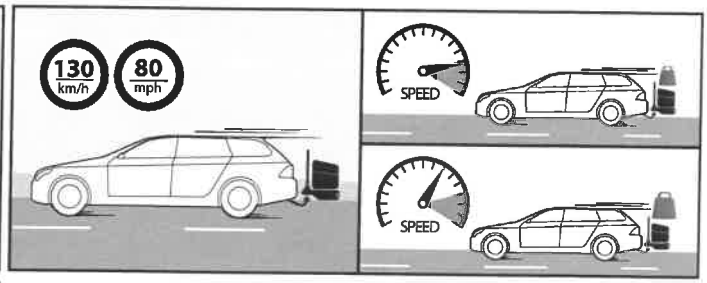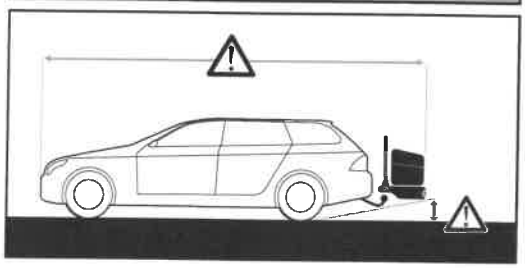
130
km/h
80
mph
SPEED
SPEED