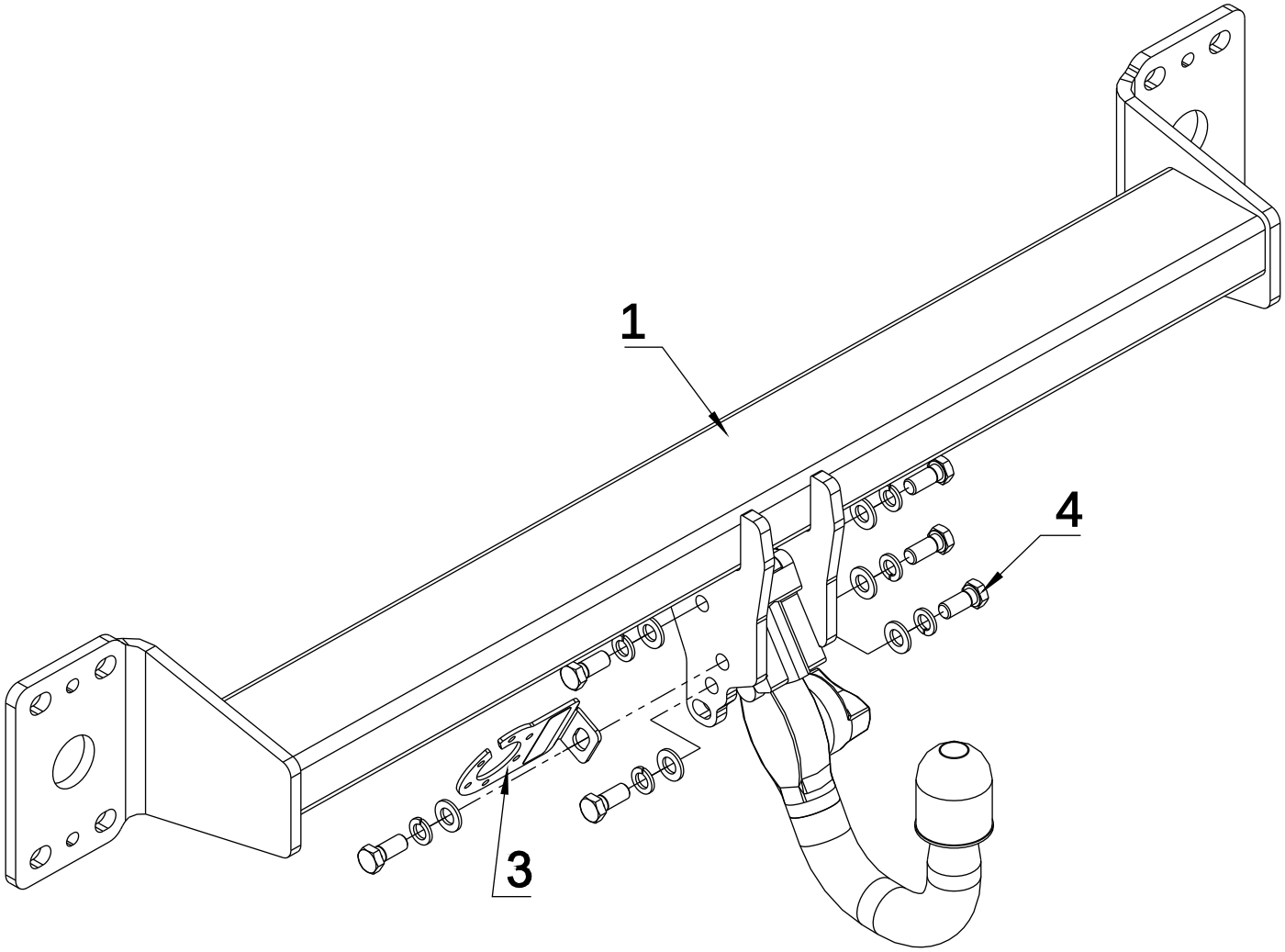

1	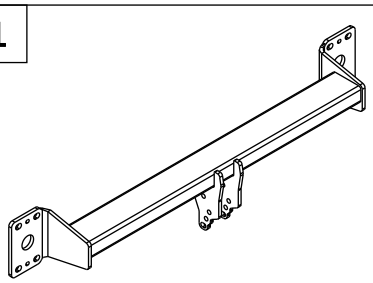	x 1	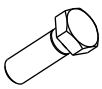	4	M12x28	x 6
			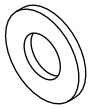	5	ø 13	x 6
2	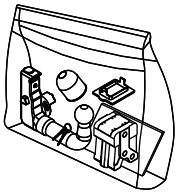	x 1		6	ø 12.2	x 6
	Art.nr-KL1K67V					
3	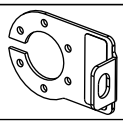	x 1				
	Art.nr-BL1K67V					

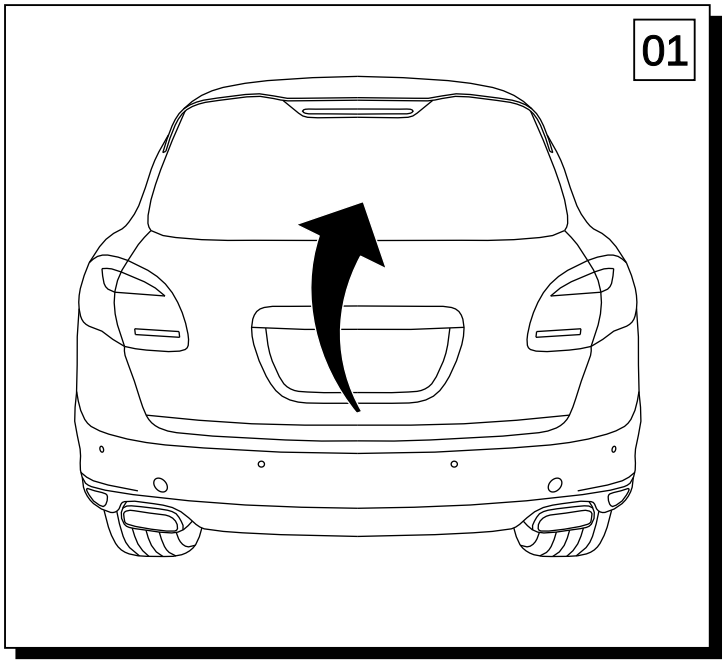
01

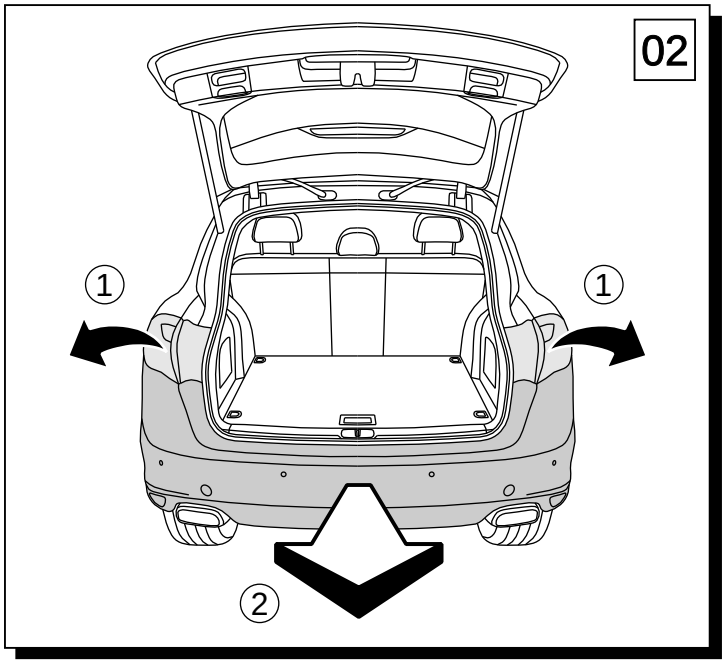
02
1
1
2

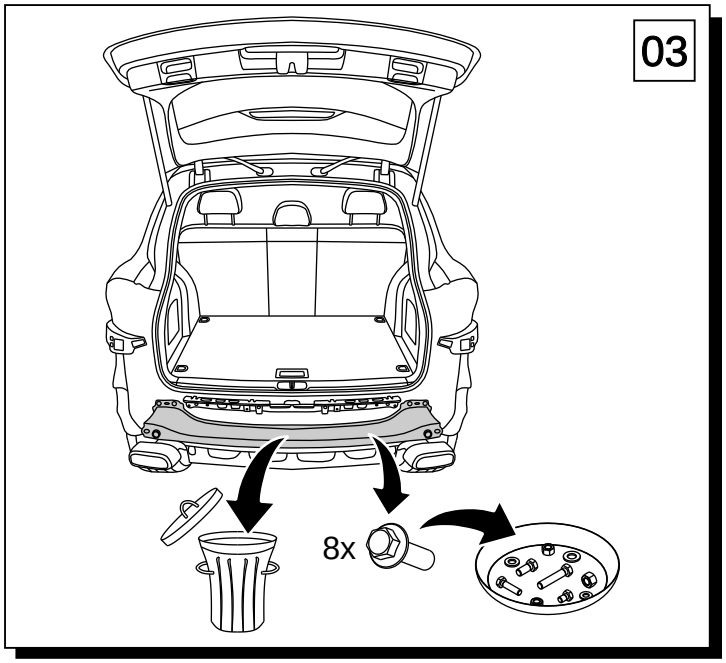
03
8x

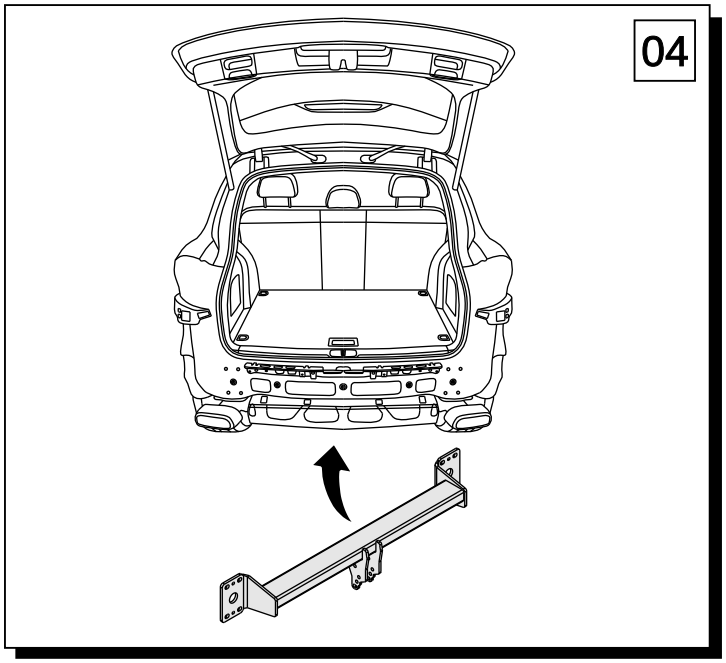
04

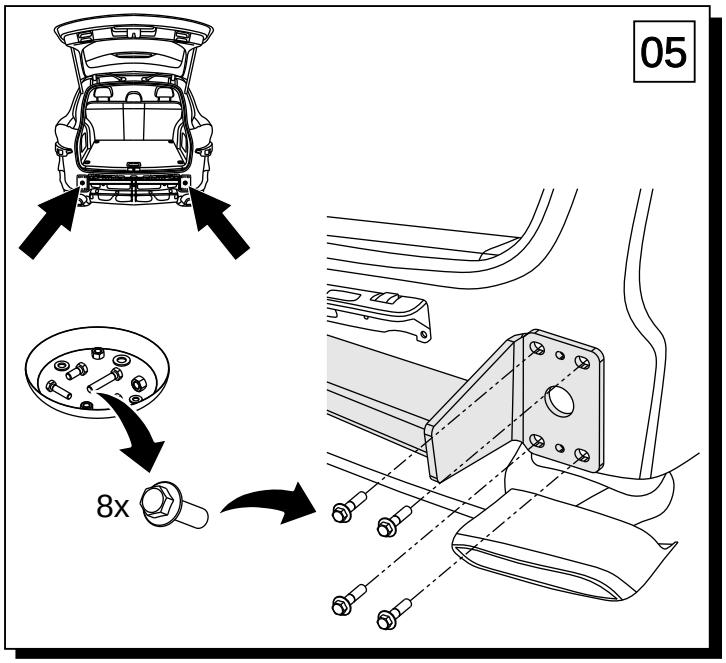
05
8x

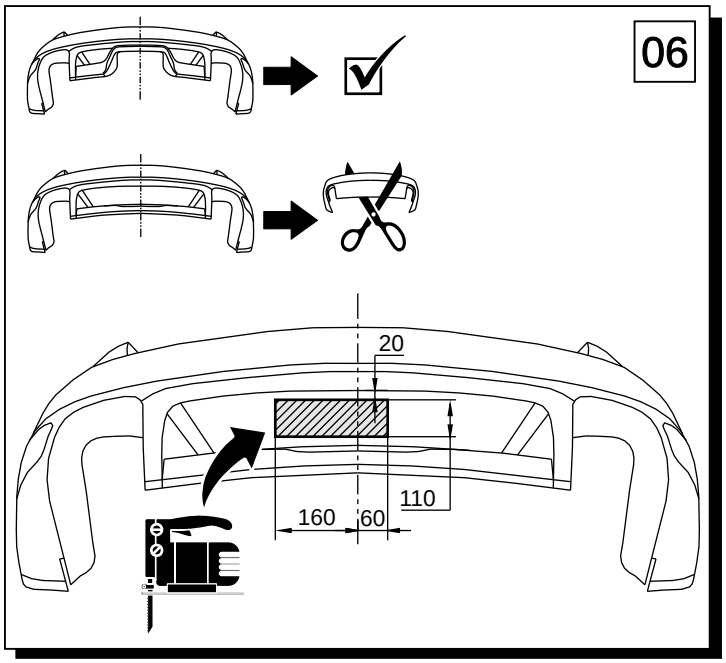
06
20
110
160
60

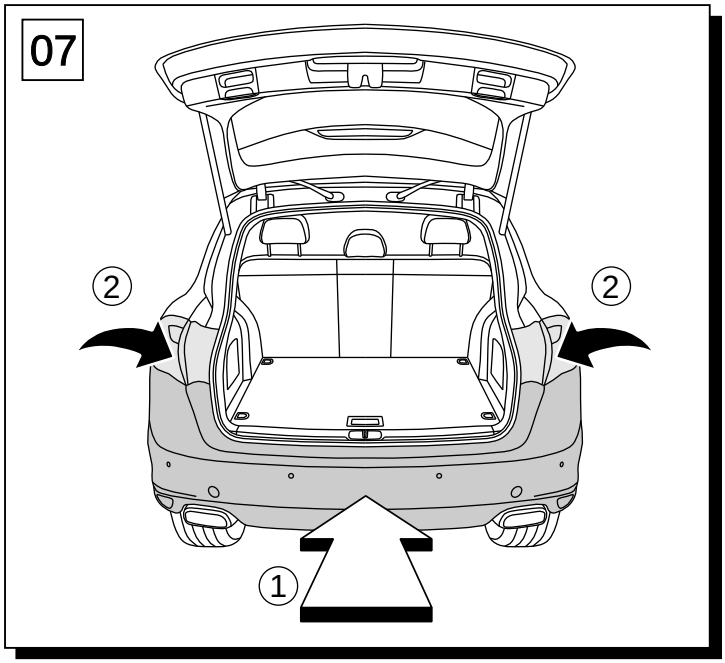
07
2
2
1

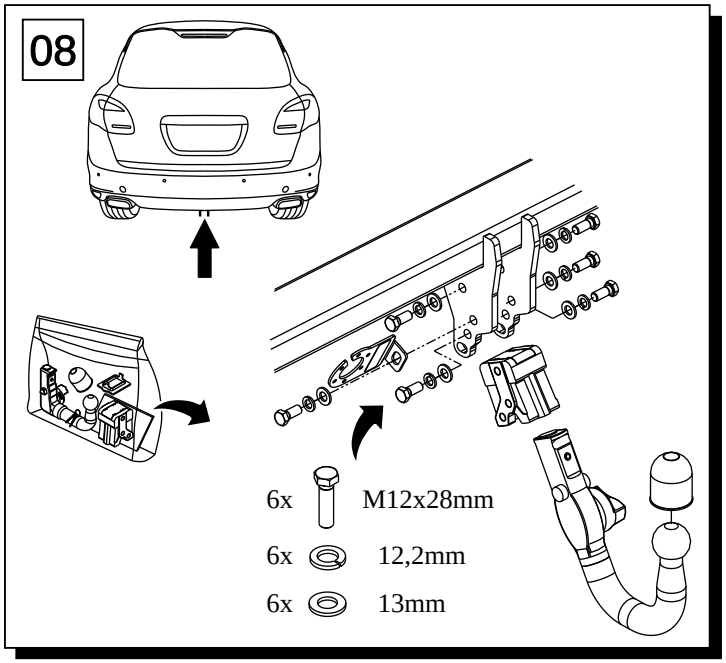
08
6x M12x28mm
6x 12,2mm
6x 13mm