Typ: T-152
F
E20 55R-01 5089
D = 16,50 kN
S = 140 kg

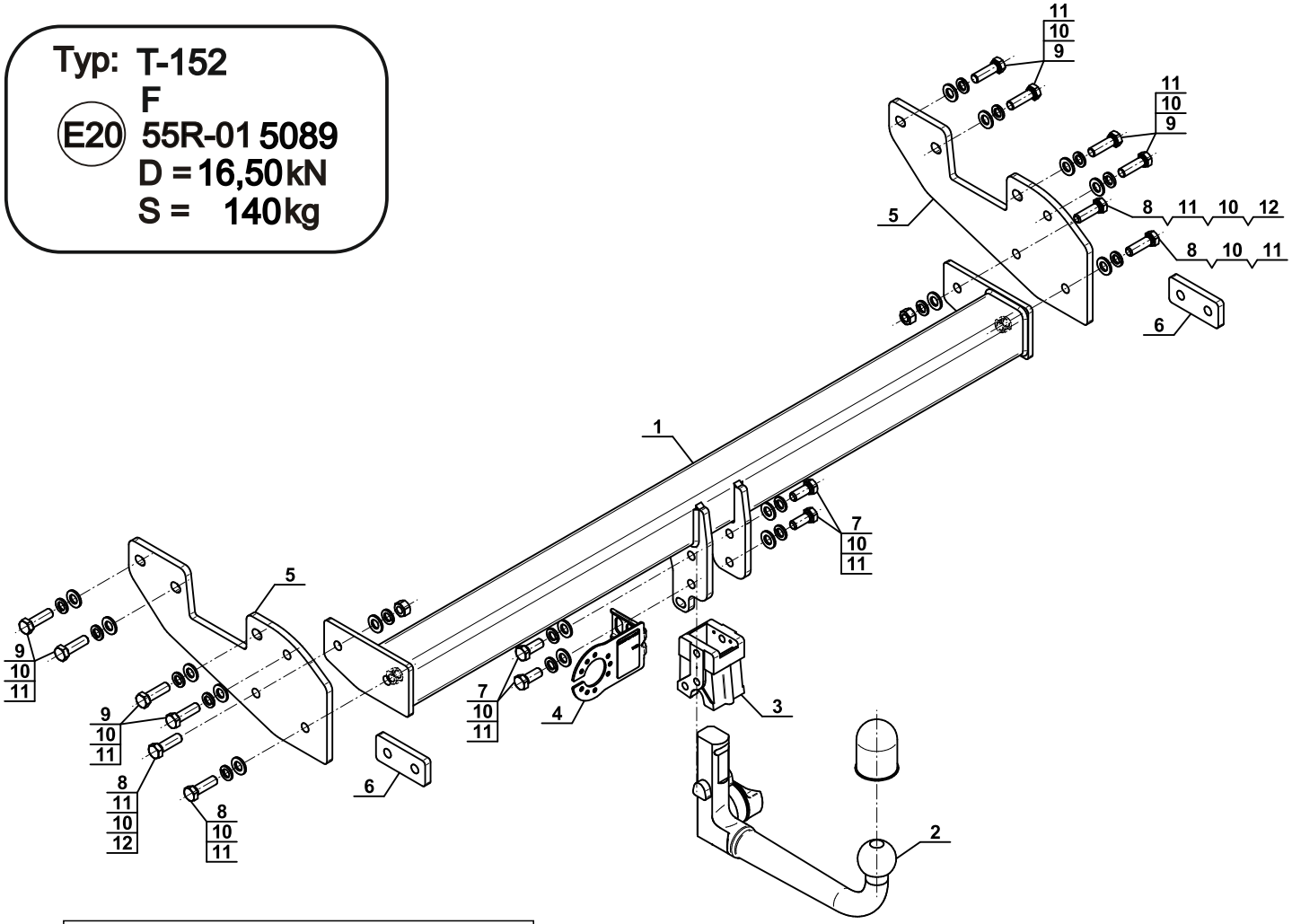

1	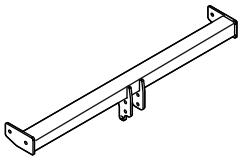	x1
2	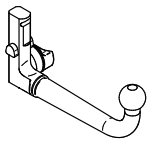	x1
3	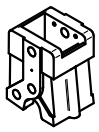	x1
4	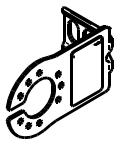	x1
5	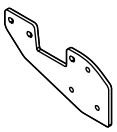	x2

6	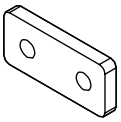			x2
7		M12x30	(PN/M-82105) (8.8)	x4
8		M12x40	(PN/M-82105) (8.8)	x4
9		M12x1,25x40	(PN/M-82105) (8.8)	x8
10		Ø12,2		x16
11		Ø13,0		x16
12		M12 (8)		x2

8.8	
M6 - 10 (Nm) M8 - 25 (Nm) M10 - 50 (Nm)	M12 - 85 (Nm) M14 - 135 (Nm) M16 - 200 (Nm)

1

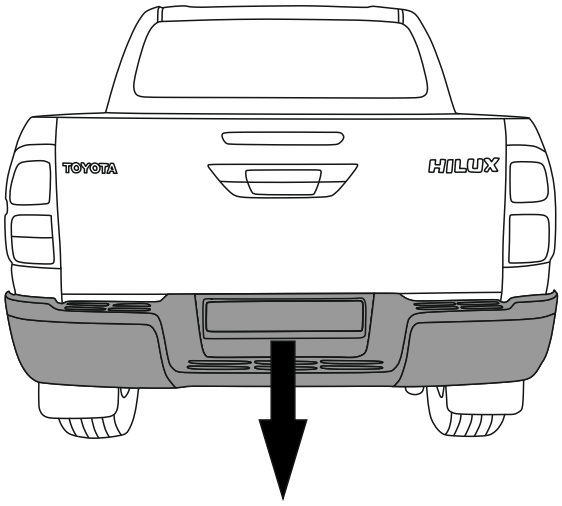

2

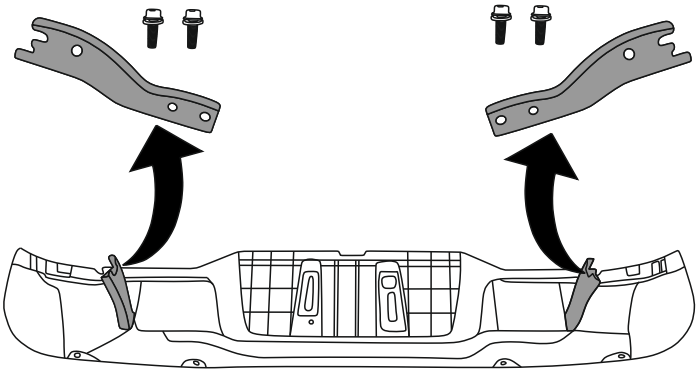

3

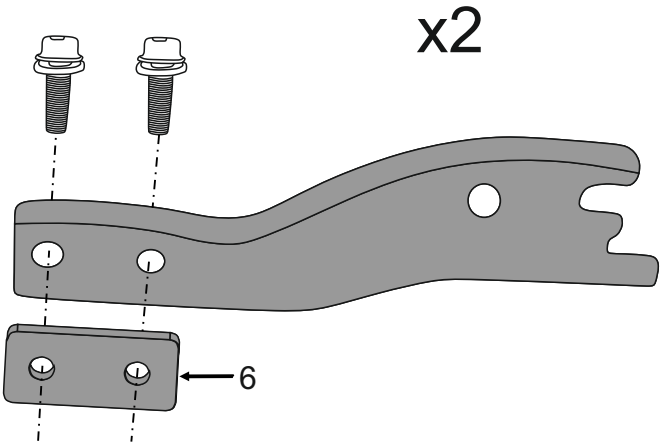

4

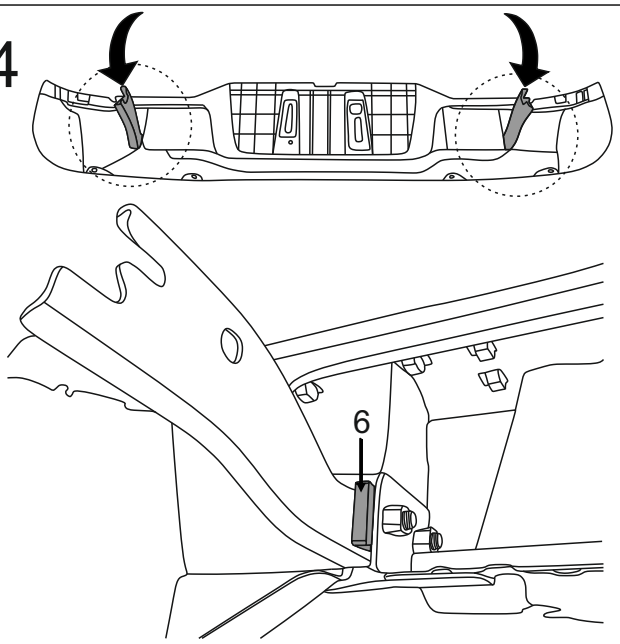

5

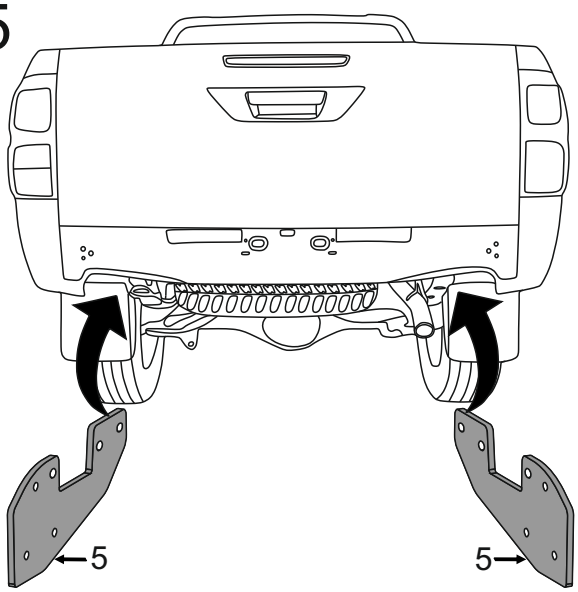

6

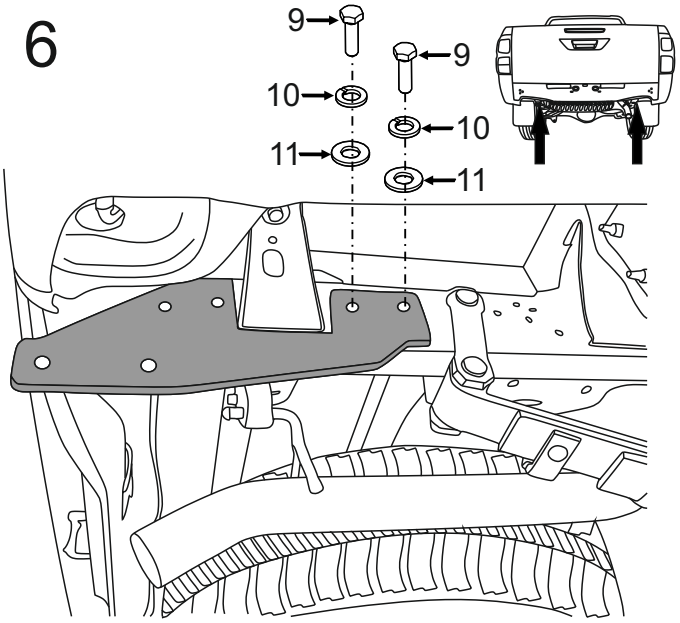

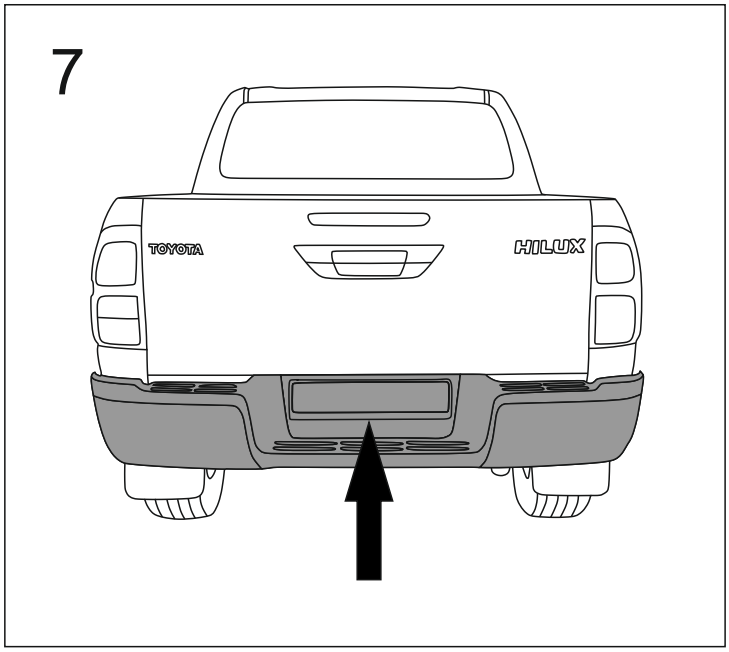
7
TOYOTA
HILUX

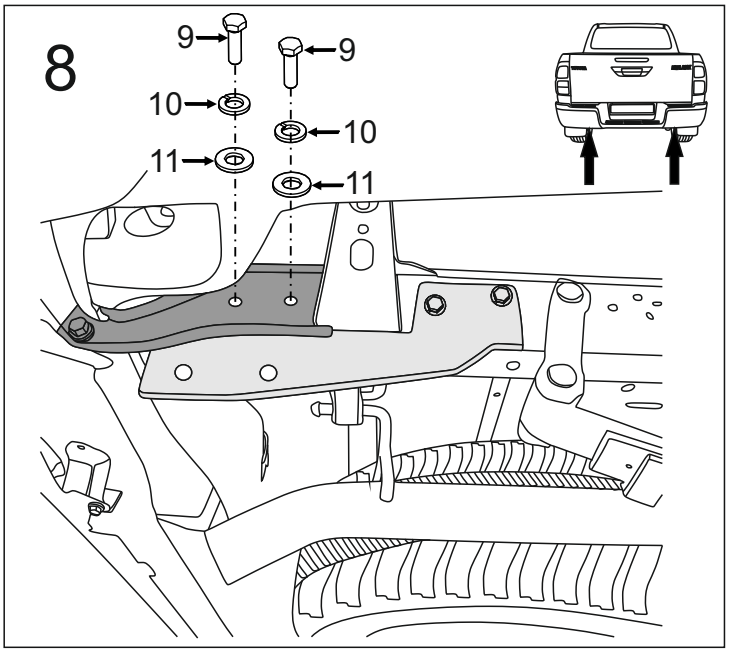
8
9
9
10
10
11
11

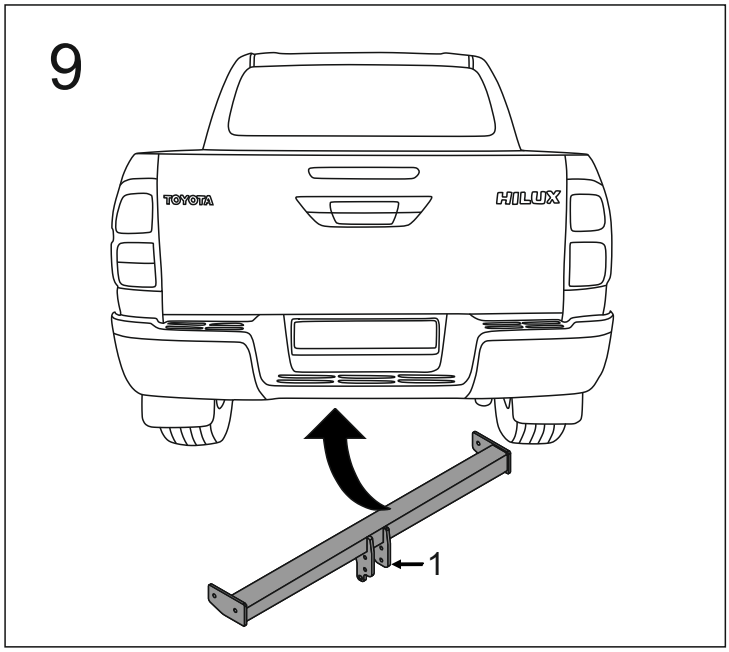
9
TOYOTA
HILUX
1

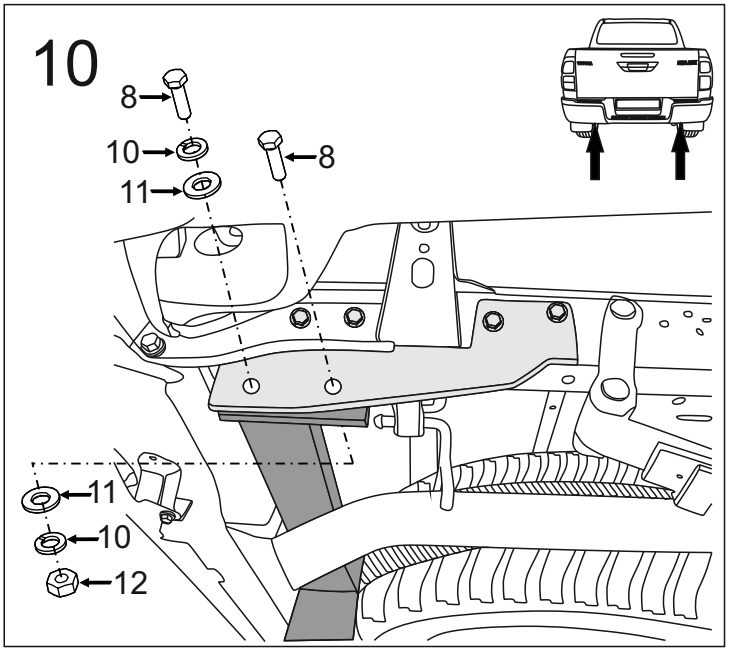
10
8
10
8
11
11
10
12

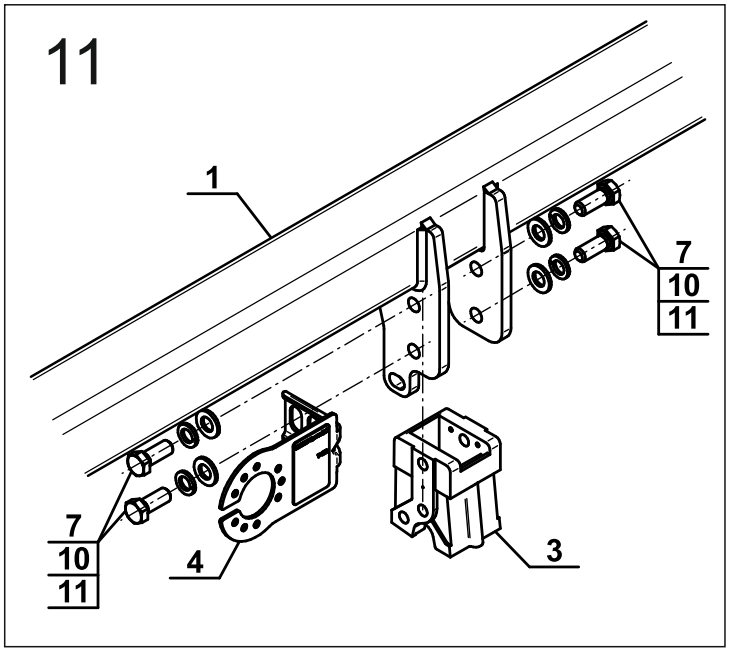
11
1
7
10
11
7
10
11
4
3

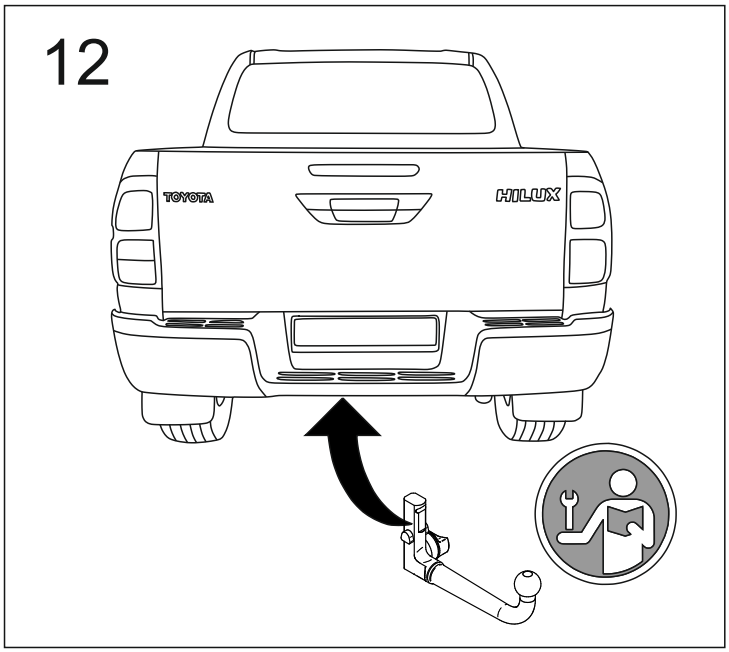
12
TOYOTA
HILUX