TOW BAR FOR
Suzuki Liana (5D)
(2001 - 2007)
FITTING AND OPERATION MANUAL

Cat. No.S-394

DESTINATION

Tow bar **S-394** is designed for towing a trailer. This ball hook has a current certification of approval authorizing the product with **E20** certification sign.

FITTING CONDITIONS

Tow bar **S-394** can be used and operated in a car with proper technical conditions of body elements. Those parts cannot be mechanically damaged . The ball hook has to be installed and operated in a car according to this instruction . All bolts and nuts in ball hook have to be screwed down with proper torque (M_o) . Torque values are given below :

M8	-	**25**	(Nm)	M12	-	**85**	(Nm)
M10	-	**50**	(Nm)	M16	-	**200**	(Nm)

OPERATION CONDITIONS

The tow bar **S-394** has a rating plate describing correct and safe loads of the hook :

Typ: **S-394**	Tow bar catalogue number.
A50-X	Tow bar class (compressing device)
E20 **55R-01 4453**	Tow bar certification of approval number
D = 6,9 kN	Teoretical related force working on a ball hook
S = 75 kg	Max permissible vertical load of the hook ball
R = 1200 kg	Max permissible load of towing trailer

D - force is calculated using the following formula:

$$D = g \times \frac{T \times R}{T+R} \text{ kN}$$

T-technically permissible maximum mass in tonnes of the towing vehicale (also towning tractors) including, if neccessary, the vertical load of a centrale axle trailer.
R-technically permissible maximum mass in tonnes of the full trailer with drawgal free to move in the vertical plane or of the semi-trailer.
g-acceleration due to gravity(assumed as 9,81 m/s^2)

During operating individual elements of ball hook should be kept in a proper technical condition and protected from corrosion . The trailer must be linked with an elastic joint with proper durability (cord , chain) while towing .It is necessary to check periodically bolt joints during operating the ball hook. If screws are eased , it is necessary to screw them down .

FITTING

The tow bar **S-394** is made up of the following elements :

1. Towbar mainframe	- 1 piece	11. Sleeve Ø17,3/Ø12,5x16	- 2 pieces
2. Tow ball (ACS-2040)	- 1 piece	12. Special washer Ø35/Ø10,5x3	- 6 pieces
3. Tow ball socket (ACS)	- 1 piece	13. Bolt M10x35	- 6 pieces
4. Electrical socket plate	- 1 piece	14. Bolt M10x50	- 6 pieces
5. Right support	- 1 piece	15. Bolt M12x25	- 4 pieces
6. Left support	- 1 piece	16. Spring washer Ø10,2	-12 pieces
7. Right holder	- 1 piece	17. Spring washer Ø12,2	- 4 pieces
8. Left holder	- 1 piece	18. Round washer Ø10,5	-18 pieces
9. Sleeve Ø17,3/Ø12,5x10	- 2 pieces	19. Round washer Ø13,0	- 4 pieces
10. Sleeve Ø17,3/Ø12,5x12	- 2 pieces	20. Nut M10	-12 pieces

Please follow the installation fitting instruction below in order to ensure correct installation of the towbar:

30.10.2015. **Cat. No. S-394**

1. Installation **requires removing and cutting of the rear bumper**.
2. Remove the rear bumper with the reinforcement.
3. Remove spare wheel.
4. Empty the trunk floor and remove the side covers.
5. Apply the towbar mainframe (1) to the rear belt. Holes Ashould cover with factory holes. Through the holes B, C drill holes Ø10,5.
6. To the inner side of the trunk apply the supports right (5) and left (6) and screw with towbar mainframe (1) using bolts M10x50 (14) with round washers Ø10,5 (18), spring washers Ø10,2 (16), nuts M10 (20) and sleeves Ø17,3/Ø12,5x10 (9), Ø17,3/Ø12,5x12 (10) (according to the drawing).
7. Through the holes D and E in the supports (5, 6) drill holes Ø10,5 and screw in point D using bolts M10x35 (13), with round washers Ø10,5 (18), special washers Ø35/Ø10,5x3 (12), spring washers Ø10,2 (16) and nuts M10 (20).
8. Attach the holders right (7) and left (8) to the bottom of the car and screw with supports (5, 6) in point E using bolts M10x35 (13) with round washers Ø10,5 (18), special washers Ø35/Ø10,5x3 (12), spring washers Ø10,2 (16) and nuts M10 (20).
9. Screw the holders (7, 8) with the towbar mainframe (1) using bolts M10x50 (14) with round washers Ø10,5 (18), sleeves Ø17,3/Ø12,5x16 (11), spring washers Ø10,2 (16) and nuts M10 (20).
10. Determine and make a cutting in the bumper ~85x85mm.
11. Install the rear bumper.
12. Cut the places of contact with bolt heads and install the side covers inside the trunk.
13. Attach the tow ball socket (3) and electrical socket plate (4) to the towbar mainframe (1) using bolts M12x25 (15) with spring washers Ø12,2 (17) and round washers Ø13,0 (19).
14. Plug the tow ball (2) into the socket (3) following the attached instructions.

Caution:
Different types of (2) may be attached to the (1) only if:
1.The adapted tow has its own information label with homologation number.
2.D and S values are equal or higher than (1) values.
3.Tow ball centre-point is in aaccordance with the drawing.

Obeying this instruction assures correct montage and the S-394 tow bar operating.

After assembling of the tow bar **S-394** you have to get entry in cars **registration book.**

CAUTION :
Check if all bolts and nuts are correctly tightened after 1000km. Keep tow ball clean, grease and cased. All mechanical damages of tow bar excludes its further exploitation . Damaged ball hook **cannot be repaired**. In case of braking the rules of montage or unproper usage manufacturer **do not take responsibility** for arised damages .

MONTAGE DIAGRAM :

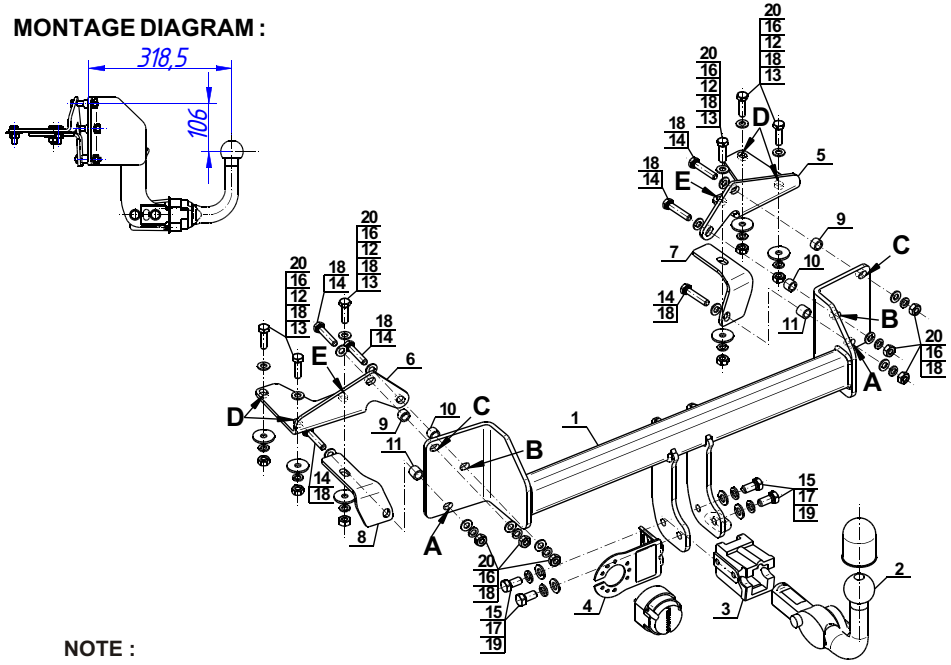

NOTE :
Bunch of wires is not included (in total price).

Cat. No. S-394